VZ LINK

NEWSLETTER

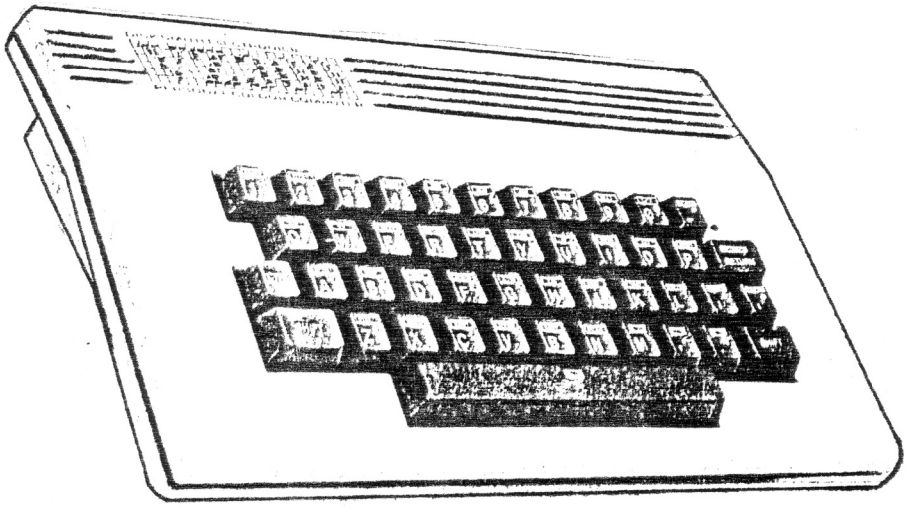

AUCKLAND VZ 300 / 200
COMPUTER USERS CLUB
P.O BOX 1972 c.p.o

ISSUE No. 10 - JULY 87

Postal address Phone 673-967 before 9 PM please

P.O.BOX 1972 C.P.O AUCKLAND

(c) Auckland VZ 300/200 Computer user's club 1986

All material in this newsletter is subject to copyright Contributed program's& articles can be reproduced on the understanding that they are for the private use of subscriber's only.

Copyright is retained by the author.

CONTRIBUTIONS

The following points will help those thinking of sending programs for publication in this newsletter.

If possible send a listing and a tape of your program. This helps me prepare the newsletter and avoid mistakes. The tape will be returned when i have finished with it.

Include some notes on what the program does and how to use it.

What is painfully obvious to the author is often obscure to we users.

For long or complex program's let me know if i can supply members with a copy of it on tape or if you are prepared to do this yourself.

The auckland users club will not be held responsible for the breeching of copyright caused by the publication of any material sent in under a false name.We like to check that we have permission to reproduce programs and items. and thank those that have given their permission to do so.

I URGENTLY REQUIRE PROGRAMS AND ITEMS FOR THIS NEWSLETTER.

MEMBERSHIP

Membership $10.00 per year(for 12 issues of newsletters)
This newsletter is available to members only.
New members will receive back issues(if available) free on request

Please make cheques payable to:

VZ 300/200 COMPUTER CLUB

NEW'S

Well, This months issue is a kind of Hacker's Special, but i hope there is just a little something for all users.

The price quoted last issue for printer/plotter pens was retail, the wholesale price from sharp is in fact $7.46 Incl G.S.T.!

From the new Australian catalogue of D.S.E we see that the following items are available:- "programming the VZ300" Cat#x-7325
& new software. :- "pharoah's curse" Cat#x-7343
"galaxon " Cat#x-7332
and another one called "maze of argon" Cat#x-7344

When these will arrive in New Zealand is anyone's guess, I suggest you pester your local D.S.E store, as it is up to them to order these into stock.

I have also heard from someone, just back from Aust. who has brought back a copy of the D.S.E disk based VZ DATABASE Cat#x-7405. I will ask him to write a small review of it for this newsletter.

In the may issue of Electronics Australia, page 51 is a circuit for a VZ300 16k memory exp. which use's two 8k x 8 6264 cmos static ram's, a 74HC138 1-of-8 decoder and a 4008 4-bit adder. If anyone want's a copy let me know and i will send you a copy.

In the back of this issue you will find a software price list from Willy Obrist. Included is a item called the magic Eprom, there will be more information about this little item next month.

I will also try to include more programs for you to type in. some public domain software which you can get from us for the cost of a blank tape plus postage and packaging, is now available, more detail's next issue. If you have just joined us, welcome, and i hope you will let us know if we can help you or if there is any special program's you want to see.

ACCESSING YOUR 64K RAM PACK

BY CHRIS HOBROUGH

If you have the 64 k ram pack for your Vz then you are lucky. With this extra ram you not only have upto 32k available for your basic programs but you have 2 other memory bank's which you can use as follows;

The other two banks effectively occupy the same addresses as the normal top 16k of memory and once each one is switched in, can be ascessed as usual. Needless to say, only one of the three is available at a time. The leaflet that comes with the ram pack claims that you cannot use this feature from BASIC but all that means is that the interpreter cannot make use of it directly. If you are writing in basic then just lower the top of memory below the 48k point (see my article on saving memory to tape in the next issue if you are unfamiliar with the use of the memory pointers) and this will leave the top 16k free to play with as you wish without upsetting the basic interpreter.

CONTINUED OVER PAGE

The software switch occupies the I/O address range 7Ø-7F H (or 112-127 decimal.nb.this is not the same as a memory address) and is simply operated by sending the number of the bank you wish to select to that address with an output command.In basic this would be:

```
OUT 127,N
```

WHERE "N" is the number of the bank you want (1-3) the "127" could have been any number from 112 to 127, it doesn't matter.If you are writing in assemby lauguage then first load the bank number into register A and then use the OUT(N),A instruction:-

```
LD A , N
OUT (7F H),A
```

Well that takes care of the HOW but leaves you with the WHEN and WHY This is really wide open and depends on your programming experience and imagination. You can't simply write away in basic and hope for the extra memory to be switched in when needed. You have to do it yourself.

Swapping banks for one memory access is possible but rather slow and so the most practical use is for machine code sub-routines and for blocks of data.Remember that any routines which are needed all the time or which call another bank must be below 48k or else they will become unavailable when you switch.

When using the extra memory for data storage from basic it is possible to use basics array structures by leaving the top of memory set at 64k and just lowering the stack below 48k, but this is very complicated and arrays use a lot of memory for overheads which further cuts down the memory available for your main program .It is best to poke the data into known positions directly.

I have a routine which uses a simple formula to calculate the bank and address for fixed length records,for a data base,based on the record number and record length.

If i have not made myself clear or you have any other problems just let me know.I would be more than happy to help if i can.Unfortunately my VZ is on the blink at the moment due to a bit of surgery that went wrong, otherwise i could llist a copy of the above mentioned routine.

Remember,better back up for the humble VZ depends on us users

COMMUNICATING

CONVERT YOUR EDITOR ASSEMBLER TO FULL DISK OPERATION - We have a conversion package to convert the Dick Smith Editor Assembler (Version 1.2 only - version 1.1 converter coming soon). All saves/loads etc. to disk. A$15 inc. postage (send to VZ USER - PO BOX 154 DURAL 2158 N.S.W AUST

PO BOX 154

HACKER'S CORNER

UPDATE YOUR own JOYSTICK'S BY DAVE BOYCE

Remove the Joystick interface from the computer.
Turn one of the Joysticks upside down and remove the 4 corner screws, (don't loose them). Now remove the centre screw (don't lose it either)
Now that the joystick is in pieces , have a gopd look at it.

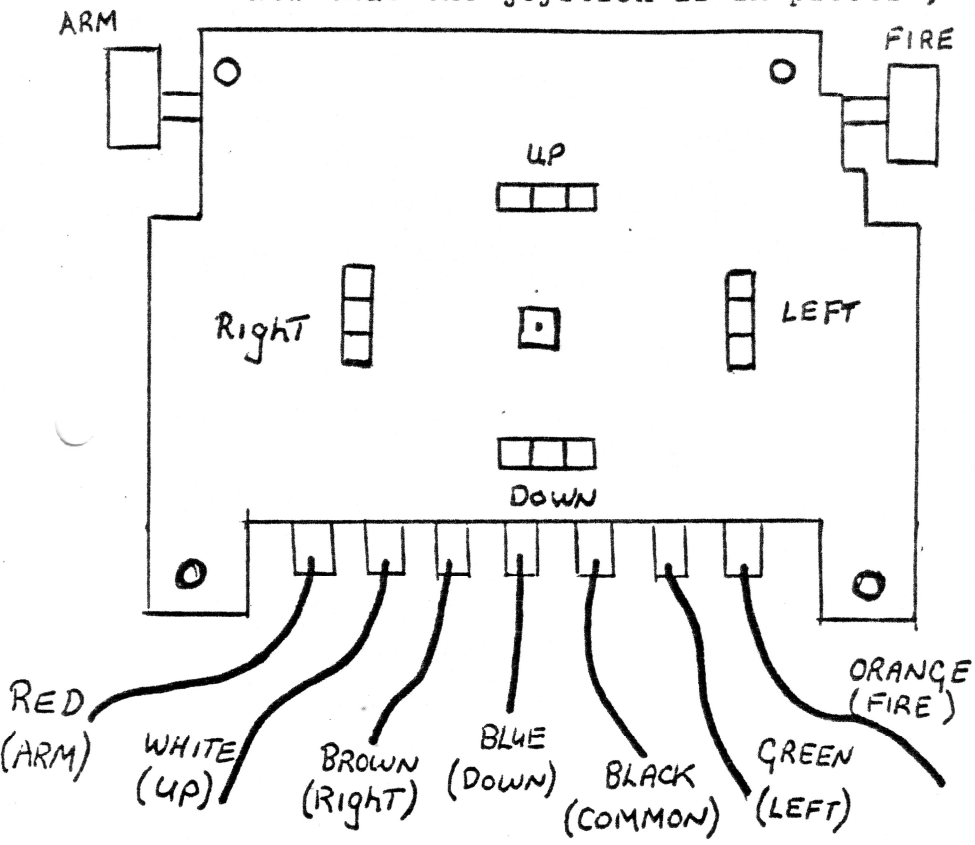

Rough view of the P.C.B
Looking at the TRACK side of the p.c.b

both stick's are the same (or should be)

These are the colours on my sticks.They may or may not be the same on your's

At this point , you should have two 9 way DB Plugs and Back shells from D.S.E p-2684 and p-2686.
Looking at the Back of the 9 way DB plug .
check that the pin numbers are the same as i've shown here.

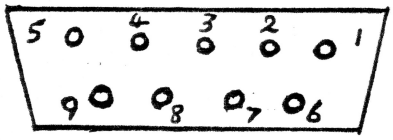

Oversize Diagram

OK. cut the wires from the VZ joysticks p.c.b leaving about an inch (25mm) still soldered to the p.c.b.

Fire up the soldering Iron and solder the wires onto the 9 way DB plug
With these colours going to these pins

PLUG PIN NUMBER	COLOUR
1	WHITE
2	BLUE
3	green
4	BROWN
5	RED
6	ORANGE
7	N.C BLANK
8	BLACK
9	N.C BLANK

NOTE

Although the RED wire is connected-if you use a standard type joystick,the arm feature will not work.

I've found that there are not to many program's that use the ARM function. If you want to use the ARM then you'll have to pull apart the joystick's you are using and do some minor surgery on it.

Simply disconnect one of the fire button's from the other and wire it up as per the VZ joystick's.You may have to run a couple of more wires along the new joystick's cable to cater for this(see diagram's).

Ok, so you don't want to lose the use of the VZ joystick's. Makeup a joystick extension lead. Get some 9 core wire and a plug . The cable can be Cut so you have a reasonable length with the plug on it.

This can then be wired up to the VZ stick's. The cable should have all nine wires in it.But they may not be the same colour ,so be careful.

If the colours I've shown here of my own stick's do not match yours then substitute your colours for mine . EG. on my stick's - the wire for up is white and goes to pin 1 on the 9 way DB plug-If your colour is purple where mine is white,then your purple wire would go to pin 1 of the plug.

I've suggested 9 way DB plug's and back shell's. I actually used 9 way DB plug's and mounted them in one of those little jiffy boxes- back shell's are not needed then.Probably cheaper this way .

Either way-reassemble the VZ stick's and you haven't put wire on them, then store them away-you never know..

ANOTHER IDEA BY DAVE BOYCE

Use your VZ as a burglar alarm.This is just a idea and has not been tried.

Joystick's (these type) are simply open or closed switches-so-if you get the computer to read the joystick port.You can use the printer port to turn an alarm on and off. This would require connecting the joystick and printer interfaces into the VZ both at the same time.

This can be achieved by building both on a piece of vero or matrix board and using a 30 way connecter to plug in with.

Alternatively ;- you could plug the printer interface into the VZ and run a flat cable out of it carrying the required number of signals for the joystick interface.

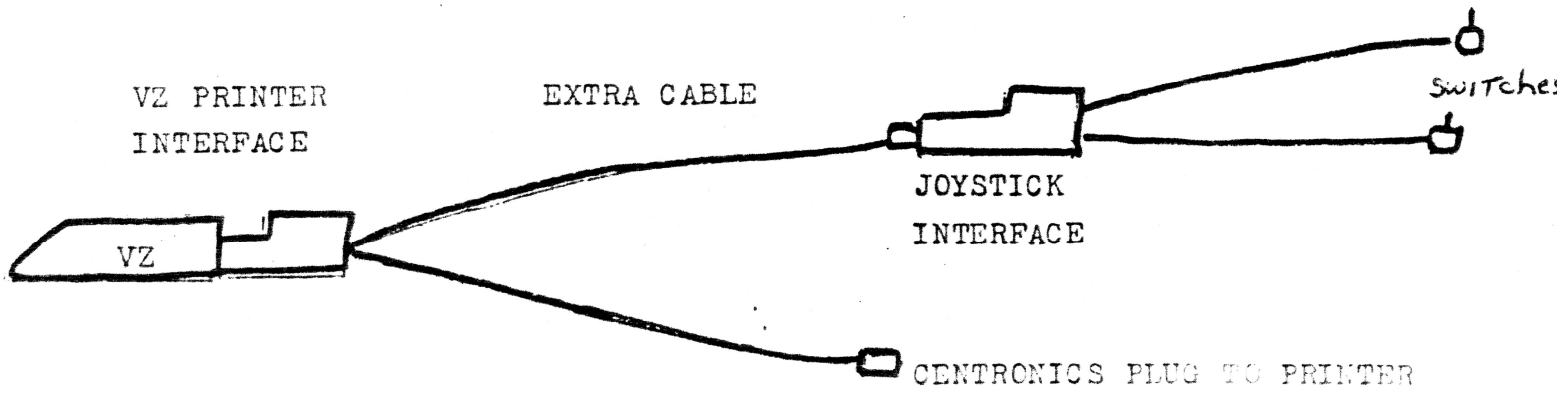

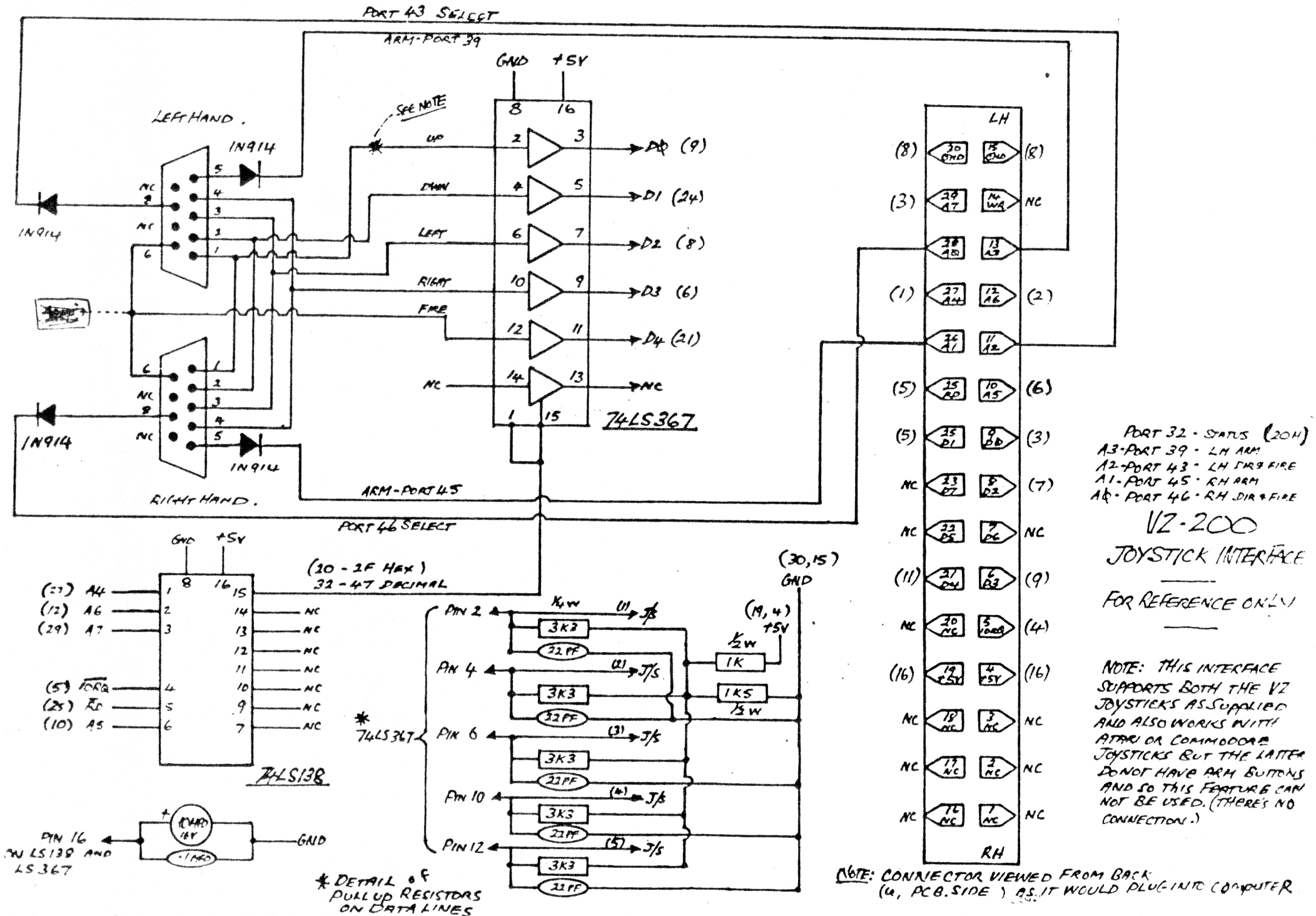

My Joystick Interface

```
10 '            ************************************
20 '            ***   DISPLAY INVERSE CHARACTER   ***
30 '            ***            SET IN ROM         ***
40 '            ***      AS USED BY DOT MATRIX    ***
50 '            ***              PRINTER          ***
60 '            ***      R. B. KITCH   27/9/86    ***
70 '            ************************************
80 '
100 'WHEN INVERSE CHARACTERS ARE SENT TO A DOT MATRIX PRINTER
110 'THE PRINTER SHIFTS TO GRAPHICS MODE AND REQUIRES A ROUTINE
120 'TO SUPPLY THE APPROPRIATE SHAPES TO THE HEAD. (NORMAL
130 'CHARACTERS ARE HELD IN THE PRINTERS ROM)
140 'IN THE VZ COMPUTER A TABLE OF SHAPES IS LOCATED AT
150 '3B94H TO 3CD3 IN ROM. THERE ARE 64 CHARACTERS, EACH USING
160 '5 BYTES TO DEFINE THEIR GRAPHIC SHAPE. THE SHAPES MAY BE
170 'DECODED AND OUTPUT TO THE SCREEN AS IS DONE IN THIS
180 'PROGRAM. NOTE THAT THERE ARE SOME ERRORS IN THE ROM.
190 'THE 5 BYTES DEFINE A 5 BY 8 DOT MATRIX WHICH IS THE SHAPE
200 'OF THE CHARACTER, WHICH INCIDENTLY ARE NOT ORDERED
210 'ACCORDING TO THE ASCII CODE.
220 'THE FIRST BYTE DEFINES THE LEFT HAND EDGE OF THE CHARACTER-
230 'WHICH IS THE FIRST PRINTED DURING A PASS OF THE PRINTER
240 'HEAD. IN TANDY PRINTERS THE MSB IS THE LOWERMOST PIN OF THE
250 'HEAD AND THE LSB IS THE UPPERMOST PIN. THE PINS ON EPSON
260 'PRINTER HEADS ARE ARRANGED IN THE OPPOSITE SENSE. THIS
270 'REQUIRES THAT THE BITS IN EACH BYTE BE REVERSED.
280 '*************************************************************
290 '
300 DIM MK%(7) :'***VECTOR OF BIT MASK VALUES - POWERS OF 2
310 DIM BT%(7) :'***VECTOR OF DECODED BITS FROM ROM VALUE.
320 '
330 '***FILL MASK VECTOR WITH POWERS OF 2 FOR DECODING.
340 FOR I%=0 TO 7 :MK%(I%)=2^I% :NEXT I%
350 '
400 '***INITIALIZE PARAMETERS - MAY BE CHANGED TO VARY SCREEN.
410 CC%=4     :'***CHARACTER COLOUR.  (1-4)
420 BC%=2     :'***BACKGROUND COLOUR. (1-4)
430 CS%=0     :'***COLOUR SET. (0-1)
440 CW%=3     :'***COLUMN WIDTH BETWEEN CHARACTERS.
450 SP%=16    :'***ROW SPACING FOR CHARACTERS.
460 HS%=0     :'***STARTING HORIZONTAL POSITION ON HI-RES SCREEN.
470 VP%=3     :'***STARTING VERTICAL POSITION ON HI-RES SCREEN.
480 HM%=127   :'***MAXIMUM HORIZONTAL POSITION. (0-127)
490 '
600 '***SET UP MAIN LOOP TO STEP THROUGH ROM FROM 3B94H-3CD3.
610 BK%=0                     :'***BYTE COUNTER FOR EACH CHARACTER.
620 HP%=HS%                   :'***SET HORIZONTAL POSITION TO START
630 MODE(1) :COLOR,CS%        :'***SET HI-RES SCREEN AND COLOR SET.
640 FOR AD%=15252 TO 15571 :'***ROM ADDRESSES FOR SHAPE TABLE.
650   DV%=PEEK(AD%)           :'***DECIMAL VALUE IN ROM.
660 '
700 '***DECODE THE INDIVIDUAL BITS OF DV% AND STORE IN BT%().
710 '***THE MASK VALUES IN MK%() ARE "ANDED" WITH THE VALUE.
720 '***THE RESULT STORED IN BT%() IS THE "COLOUR" OF THE BIT.
730   FOR I%= 0 TO 7          :'***PROCEED FROM LSB TO MSB.
740     IF DV% AND MK%(I%) THEN BT%(I%)=BC% ELSE BT%(I%)=CC%
750   NEXT I%
800 '
810 '***CHECK THAT THERE IS ENOUGH ROOM TO PLOT CHARACTER.
820   IF BK%=0 AND HM%-HP%<4 THEN HP%=HS% :VP%=VP%+SP%:'*NEW ROW
830   BK%=BK%+1               :'***INCREMENT BYTE COUNTER.
840 '
900 '***OUTPUT BYTE TO SCREEN.
910   FOR I%=0 TO 7
920     COLOR BT%(I%)         :'***SET COLOUR OF BIT.
930     SET(HP%,VP%+I%)       :'***PLOT BIT.
940   NEXT I%
950 '
1000 '***PREPARE FOR NEXT BYTE.
1010   HP%=HP%+1              :'***INCREMENT HORIZONTAL POSITION.
1020   IF BK%=5 THEN BK%=0 :HP%=HP%+CW%       :'***NEW CHARACTER.
1030 NEXT AD%
2000 GOTO 2000 :END
```

PROGRAM FOR MAKING UP ACCOUNTS

BY RICHARD DAVIS OF MILDURA AUSTRALIA

WHEN RUN THIS PROGRAM WILL ASK FOR INPUT FROM THE USER AS FOLLOW'S

ITEM# **** ENTER ITEM OR SERVICE

PRICE ***** ENTER PRICE OF SAME

CONTINUE UNTIL ALL ITEMS ARE LISTED THEN PRESS RETURN INSTEAD OF NEXT ITEM.IT WILL THEN ASK FOR ANY SALE'S TAX, IF NONE PRESS RETURN THEN ENTER DATE & PRESS RETURN ,THEN ENTER NAME OF PERSON & PRESS RETURN IT WILL THEN LIST ALL ITEMS ON SCREEN WITH TOTAL AND SALES TAX IF IT APPLIES, IF ALL IS CORRECT YOU CAN THEN GET A PRINTOUT WITH A SECOND COPY IF YOU WANT.

CHANGE THE HEADING TO THE ACCOUNT AND CHANGE SALES TAX TO READ G.S.T

```
10 CLS:CLEAR 1000
20 DIM A$(20),B$(20),N(20):N=1
30 PRINT"ITEM #";N:INPUTA$(N)
40 IF A$(N)="" THEN 72
50 INPUT"PRICE";B$(N)
60 X$=STR$(VAL(X$)+VAL(B$(N))):N=N+1
70 GOTO 30
72 INPUT"TAX";T
80 INPUT"DATE";D$
82 INPUT"NAME";N$:CLS
84 PRINT@448,"MATTHEW DAVIS     8 AVOCARD
O ST"
85 PRINTTAB(19);"MILDURA 3500"
86 PRINTTAB(21);D$
88 PRINTN$
90 PRINT"------------------------------
-"
100 FOR M=1 TO N-1
110 PRINT A$(M);
120 PRINT TAB(18):PRINTUSING"$$######.##
";VAL(B$(M))
130 NEXT
135 PRINTTAB(21)"--------"
140 PRINTTAB(18):PRINTUSING"$$######.##"
;VAL(X$)
144 PRINT"SALES TAX";T"%";
145 PRINTTAB(18):PRINTUSING"$$######.##"
;(VAL(X$)*T)/100
146 PRINTTAB(21)"--------"
147 PRINT"   TOTAL";
148 PRINTTAB(18):PRINTUSING"$$######.##"
;VAL(X$)+(VAL(X$)*T)/100
149 PRINTTAB(21)"--------":PRINT:PRINT
150 INPUT"DO YOU WANT A HARD COPY Y/N";B
$
160 IFB$="N"THEN RUN
163 LPRINT"MATTHEW DAVIS                8 AVO
CARDO ST"
164 LPRINTTAB(26);D$
165 LPRINTN$
166 LPRINT"------------------------------
---"
170 FOR M=1 TO N-1
180 LPRINT A$(M);
190 LPRINTTAB(26):LPRINTUSING"$$######.#
#";VAL(B$(M))
200 NEXT
210 LPRINTTAB(27)"----------"
220 LPRINTTAB(26):LPRINTUSING"$$######.#
#";VAL(X$)
230 LPRINT"SALES TAX";T"%";
232 LPRINTTAB(26):LPRINTUSING"$$######.#
#";(VAL(X$)*T)/100
234 LPRINTTAB(27)"----------"
236 LPRINT"  TOTAL";
238 LPRINTTAB(26):LPRINTUSING"$$######.#
#";VAL(X$)+VAL(X$)*T/100
239 LPRINTTAB(27)"----------"
240 LPRINT:LPRINT:LPRINT:LPRINT
241 INPUT"DO YOU WANT ANOTHER COPY?";Q$
242 IF Q$="Y"THEN 163 ELSE RUN
```

SAMPLE OF PRINT-OUT

```
MATTHEW DAVIS                    8 AVOCARDO ST
                                   23.5.1987
R.G.DAVIS
-----------------------------------------
VZ 300 COMPUTER                        $99.00
MEMORY EXPANSION                       $79.95
DISK DRIVE                            $299.00
DISK CONTROLLER                        $99.00
                                   ----------
                                      $576.95
SALES TAX 0 %                           $0.00
                                   ----------
  TOTAL                               $576.95
                                   ----------
```

REVIEW

REVIEW OF D.S.E PROGRAM KAMIKAZE

Loading time 1min 40 sec for tape
Keyboard / joysticks optional

Another space Invaders type game from Dick Smiths
In this game,Kamikaze invaders arrive from who knows where ?,in their mother ship.
The Kamikaze leave their mothership and enter launching shutes or columns. There are five columns on each side of the mothership.
Each column holds four kamikaze and when a fifth one enters the top of it, the bottom kamikaze falls out.
You never know which column will fill first,the columns don't fill up in any set order nor does one column fill up at a time.

Your job is to shoot the kamikaze before they fill up a column or shoot the one's that are falling before they hit earth.

The mothership also drops a bomb at random times, but these are easy to destroy.If a Kamikaze get's by you and hit's earth it explodes and then emits a electrical blast which will destroy you, if you are in range.

Kamikaze develops into a fast action game and it takes along time to get used to playing this game. I feel that Kamikaze has missing the graphics and action of the other new VZ programs i have previously reviewed in this newsletter.

The colours are good , but the game just seems to lack something that would make it as challaging as say "Dawn Patrol" or even "Ghost Hunter from the stable of older VZ program's.

None the less the idea is good and if you like this type of program then it's all your's.

As for me i wish i had been able to view this program before i purchased it.If i had i would never have bothered,but don't let this personal view put you of.

Written by P.J HILL (auckland)

AEM 4504 SPEECH SYNTHESISER - Scott Le Brun - A$100.00

This unit plugs into the PRINTER INTERFACE. Your choice of external power supply or power derived from the VZ through the printer interface. (Modification of the printer interface is required for the latter. Full detail are given to show you how to do this.) Comes complete with case, centronics socket fitted, internal speaker with phono jack supplied for use with external speaker. Include software on tape comprising of PHRASE COMPOSER & DICTIONARY both written by Scott Le Brun for the VZ. The unit comes completely built and tested at the incredible price of $100.00. inc P&P!

W.OBRIST SOFTWARE LIST

50 COBHAM AVE

WEST RYDE NSW 2114

PRICE LIST :

Monitor Debugger 3.0 $A20.00
- monitor/debugger utilities that works with any memory size.

Protect 2.0 $A15.00
- utility that makes basic programs unlistable and self-starting.

XX80 Files $A15.00
- utility that allows to read TRS80 model 1 level 2 and all System80 software.

Extended Basic $A15.00
- utility that enables the use of all Basic statements as the TRS80 model 1 and the System80. (24k Ram version)

Merge Delete Renumber $A15.00
- utility that allows merge of basic programs, enables the delete function and lets you renumber the program (24k Ram version).

Array Utility $A15.00
- lets you save complete arrays onto tape with enormous speed. (24K Ram version)

Magic Eprom $A45.00
- a 2732 or 2532 Eprom that resides at 4000h (clashes with disk controller) which holds the Extended Basic, Array Utility, Merge Delete Renumber and the Monitor Debugger. No messing around with loading nor memory size. (Note Eprom must be fitted by customer).

Array Utility

This powerful utility can dump 800 records of 16 characters in less than 4 minutes onto tape. It is located at CCD4-CFFFH (812 bytes). It can be loaded at any time without destroying a basic program or the EB-utility even so if the Merge/Delete utility was used before. With this array utilityu you can save or load whole arrays at the tape speed of 600 baud, regardless of the length or the number of dimensions. Restore N enables you to move the data pointer for the read command to the first element of any data line in your program. Important this utility will only run if the basic program was written by an extended basic which accepts the disk commands LOAD, SAVE, KILL and NAME. This program will not run when DOS is installed.

Command Summary:

SAVE A,B$	writes arrays A and B$ onto the tape
LOAD A,C	loads arrays A and C only
KILL D	deletes array D
NAME A,B	array a becomes b
RESTORE 100	data pointer is moved to 1st element of line 100

Protect

This utility allows you to make self-executable and non-listable tapes of any basic program you developed or own. It also makes producing of protected tapes very easy and fast. Machine language programs which reside inside the basic program or depend on absolute address of the basic program must be relocatable, as the basig program is shifted upwards a little. There are however no restrictions for m/l utilities which are poked at the top of memory.

Command Summary:

C make a protected copy of loaded basic program, same name as with load
L load a basic program into memory
V verify a protected tape

XX80-FILES

This very useful utility gives you access to all TRS80 model 1 level 2 and System80 software. It loads any ..80 basic file into your VZ machine.

Command Summary:

PRINT USR(0) gets you going

Extended Basic

It is loaded at C9D2-CC63H (658 bytes). The space left is needed for the Merge or Array utility. Both are working with the extended basic and may be loaded at any time as needed, without destroying a basic program. All 45 missing TRS80 level 2 keywords are translated into their tokens and are listable at any time. This gives you 19 additional basic commands/functions and all the disk command exits which are very handy to link any M/L programs. Note that basic programs written with that utility are running without it, even if commands/functions from the list below are use. This program will not run when the DOS is installed.

Additional Commands/Functions:

POS-FRE(X$)-MEM-ERR-ERL-FIX-CDBL-CSNG-CINT-ON-AUTO-DEFINT-DEFSNG-DEFDBL-DELETE-RANDOM-VARPTR-STRING$-RESUME

Disk Commanmds/Functions:
LOF-LOC-EOF-CVD-CVS-CVI-DEF-PUT-GET-MKD$-MKS$-MKI$-TIME$-CMD-FN-LSET-RSET-OPEN-CLOSE-LOAD-SAVE-KILL-NAME-MERGE-FIELD-INSTR

Merge/Delete/Renumber

This program is located at CC64-CFFFH (924 bytes). It is running alone or together with the EB-utility. Loading is possible at any time without destroing a basic program.

Command Summary:

CMERGE "test 2"	basic program test 2 is merged to program in memory
DELETE x,x-y,-x	the specified line(s) are deleted
REN x,z/x-y,z	renumbers specified lines (x/y range, z increment)

Monitor 2.0

This is a very helpful and important tool for any programmer using machine language. There are no hassels with different memory sizes, as the monitor is self-relocateable and uses the highest 1.5 kilo bytes of the computers memory. Nine commands and a test routine give the monitor its power and versatility. The test routine, which should be called from within the program under test, shows all registers/flags prior to the call and gives control to the monitor. Once in the monitor you are able to change flags/registers and memory contents which allows easy and complete testing. After all your changes are made, you can continue to the next test call or set a new break point.

Command Summary:

B	return to basic
C bbbb	continue (bbbb next break point, optional)
D ssss eeee	display memory (from ssss to eeee, optional)
G ssss bbbb	start program at ssss (break point at bbbb, optional)
M xxxx-yyyy zzzz	move memory xxxx-yyyy to zzzz
P	as D, however echoed to printer
R	displays and/or alters flags and registers
L ssss	loads vz-cassette files (ssss new start address, opt.)
S ssss eeee	save onto cassette from ssss to eeee
Call xxxx	test routine, same effect as setting a break point, xxxx differs according to memory size and is shown in HL on power up.

Acknowledgement

We would like to thank the following people who contributed to this issue:

Accessing your 64k ram --Chris Hobrough .

Hacker's Corner (both item's) --Dave Boyce .

Printer item Re inverse character set -- Bob Kitch

Account printing program -- Richard Davis

KamiKaze Review -- Peter Hill

Software price list -- Willy Obrist

This Acknowledgement's section is intended as a type of index for each issue and if any user wish's to write to any of the people listed above to get further information or just to make contact,then write to me for their address.

NOTE

I forgot to acknowledge the contributor of the better basic item in last months issue; Thank's to Mark Harwood,From his VZ user magazine.